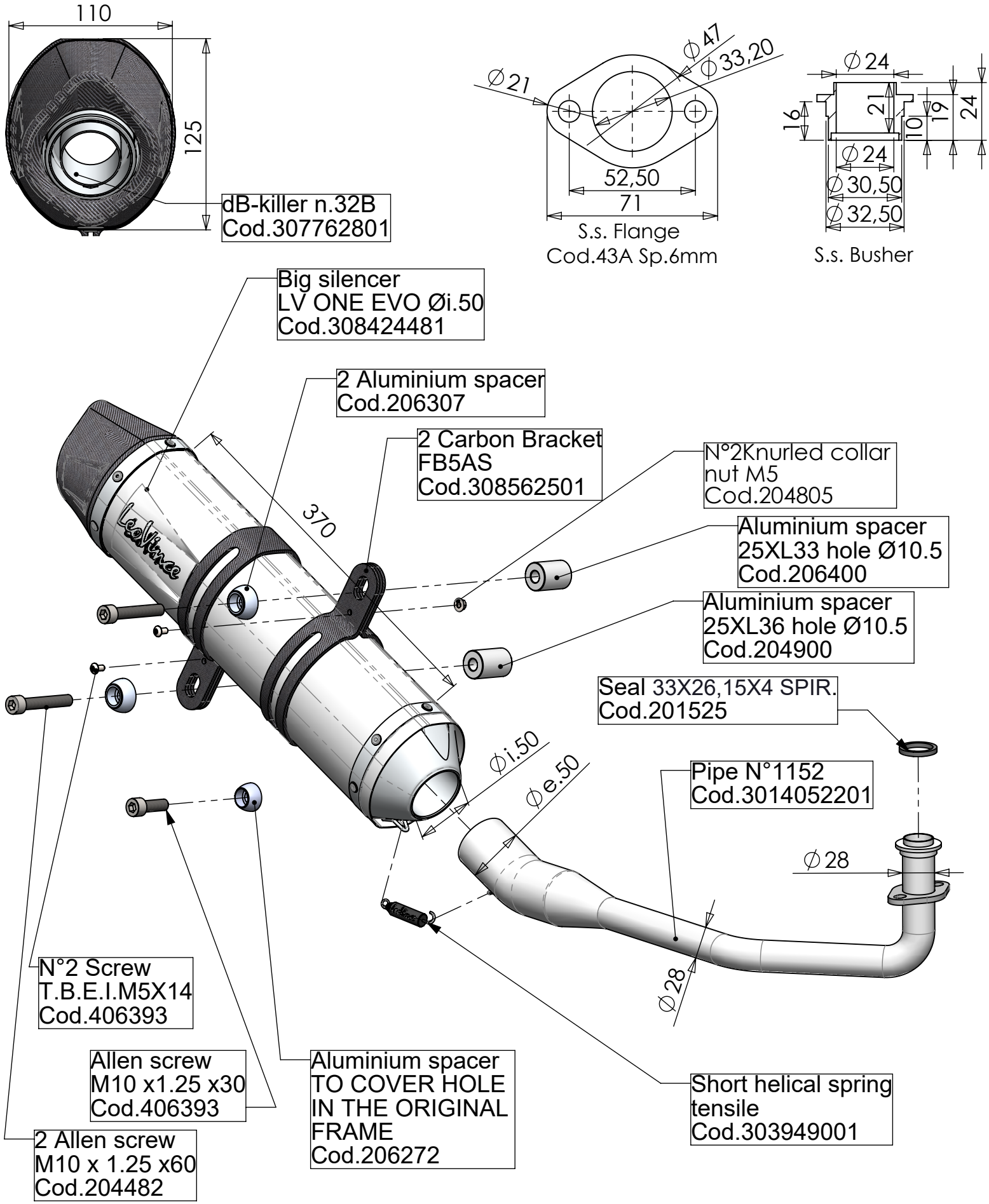

ART. 14215E

HONDA FORZA 125 / NSS125 / ABS

FULL SYSTEM 1/1 - LV ONE EVO - STAINLESS STEEL