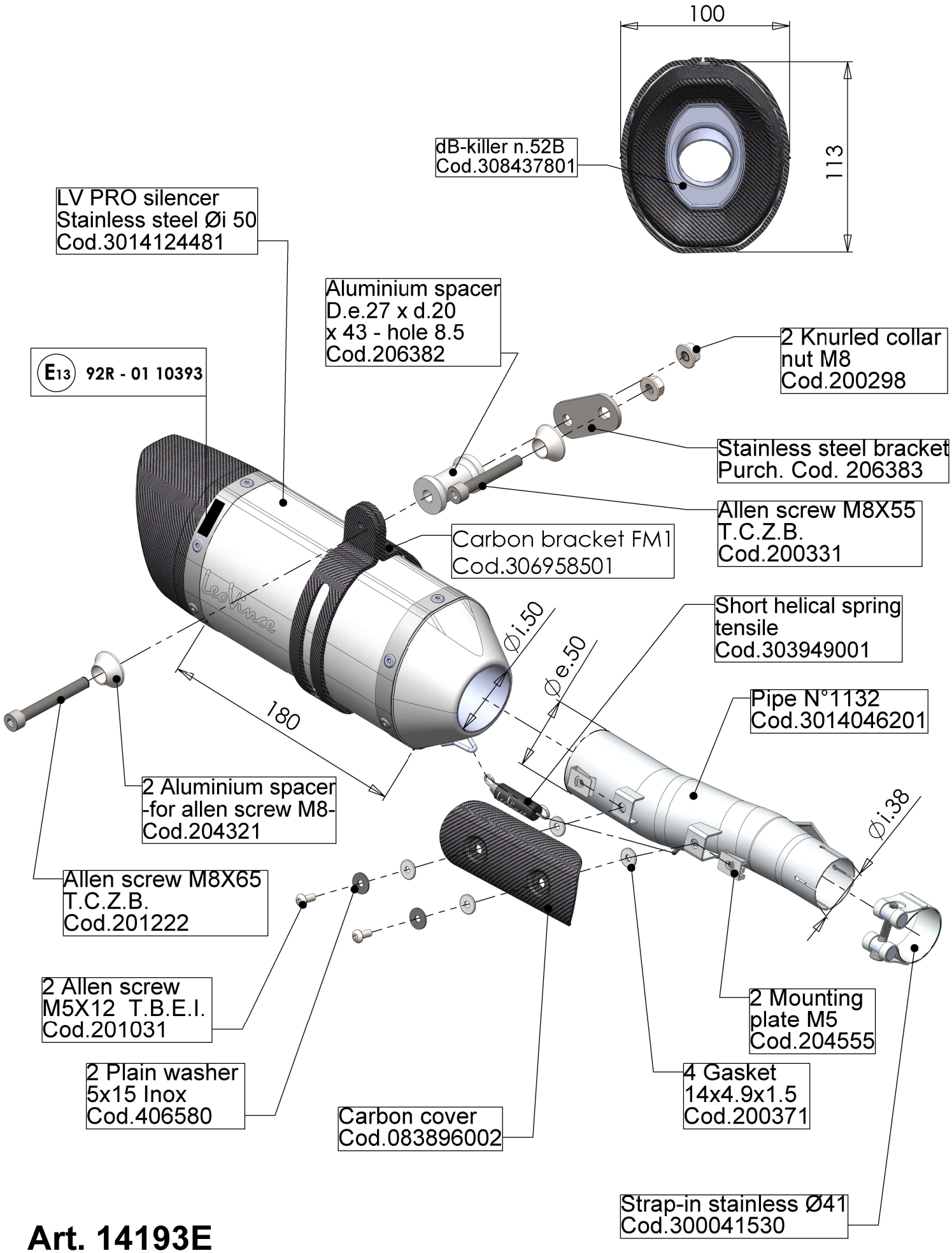

Art. 14193E

HONDA X-ADV 750

SLIP-ON - "LV PRO" - APPROVED